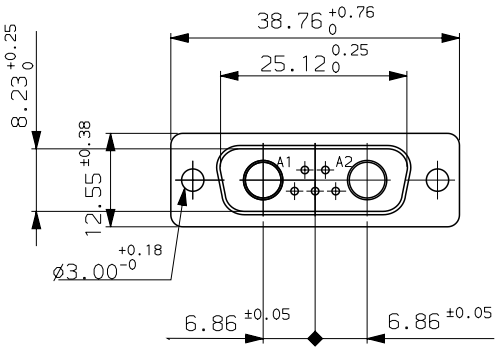

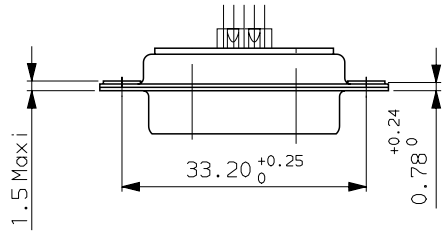

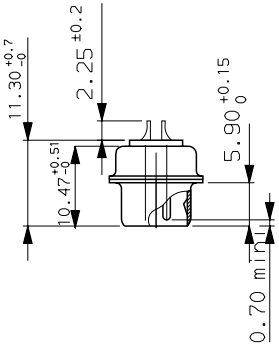

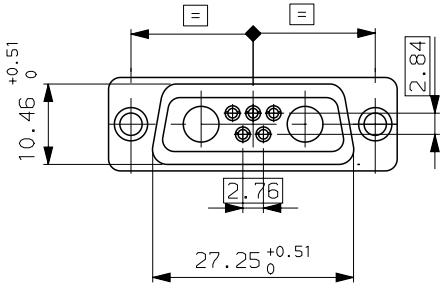

PC card drilling dimensions (after plating)

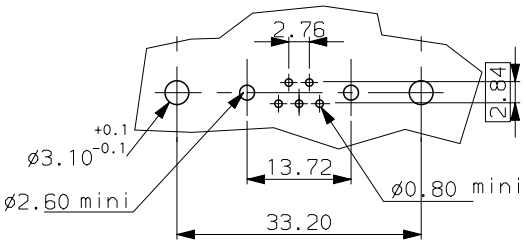

CHARACTERISTICS:

Max current rating:	7.5A per standard contact
Dielectric withstanding voltage:	1000V minimum
Insulation resistance:	>5000Mω
Contact resistance:	≤7.3mω
Mating and unmating forces:	conform to MILC24308
Contact retention:	40N for contact size 20
Material of -insulator:	green polyester class UL 94 V-0
-shell:	Steel
-contact:	brass
Plating of -shell:	cadmium plated
-contact:	
mating area;	AU 0.4 µ mini
termination area;	Sn Pb 2 µ mini
Contact diameter:	1 mm
cable diameter:	AWG 20 maxi (0.6mm²)
Temperature range:	-55°C,+125°C

TEST RESULTS

Contact resistance after 100,200,500 mating/unmating: RC≤7.3 mω

Mating/unmating force after 200 mating cycles: <0.2N per contact

Shock test results:
method 2004 MIL STD 1344 discontinuity ≤1 microsecond

Vibrations: method 2005 of MIL STD 1344 discontinuity≤ 1 microsecond

Humidity: method 1002 of MIL-STD-1344

DAM7W2PN

ISS	DATE	Lastest modification by : JOUBERT	MOD N°
a	03/10/96	Creation of drawing .	--

Designed by: JOUBERT date 03/10/96 | Type of drawing: CLIENT

Checked by : FONTENEAU date: -- | Released by: -- --

TITLE : PIN CONNECTOR FOR POWERS CONTACTS .

SCALE 1.5 | Special mfg:-- item list n°: -- | MATERIAL:-- -- | N°: --

General linear Tolerances: -- | General machining surface texture: -- | Geometrical Tolerances see NF E 04-552 | SHEET 01

FCI FRAMATOME GROUP
FRAMATOME CONNECTORS FRANCE
Rue Louis Breguet - BP 05
72024 LE MANS Cedex
Tel. 33 (16) 43.84.08.43

This document is the property of FRAMATOME CONNECTORS FRANCE It must not be reproduced or communicated without permission in writting flow the owners

FORMAT A3 | SOURIAU DRG N° C01-8639-0644 | PROJECT M94D001