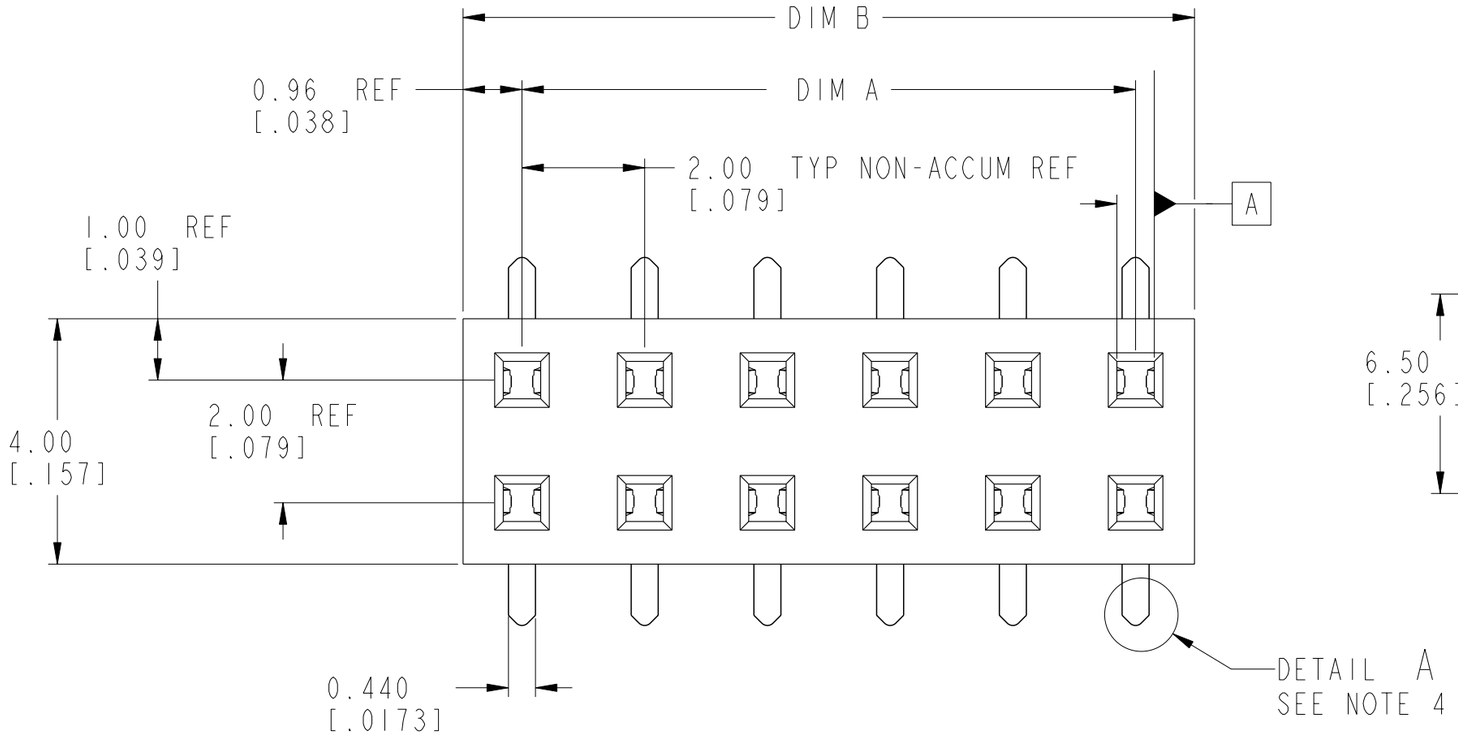

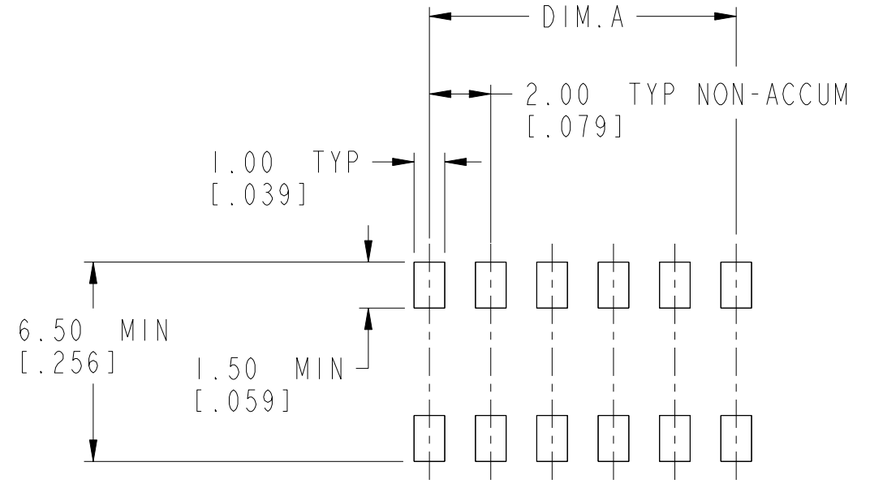

RECOMMENDED PCB LAYOUT

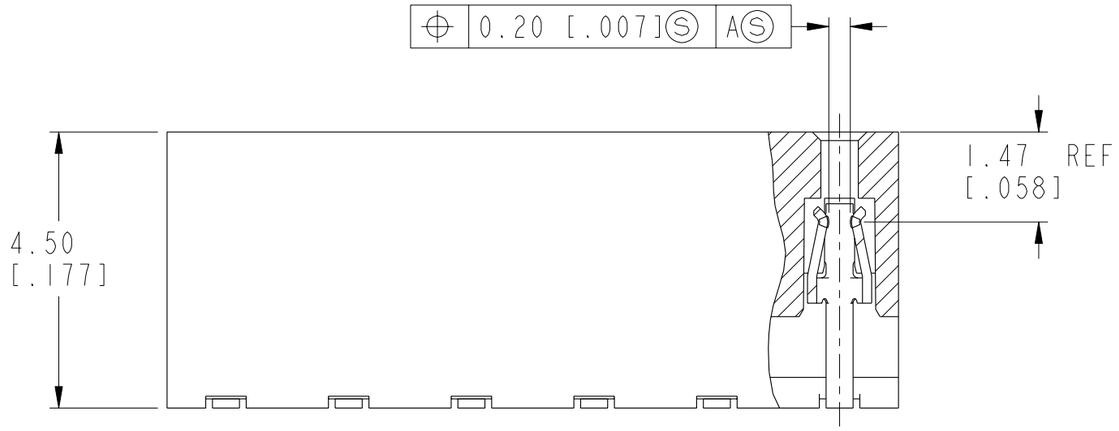

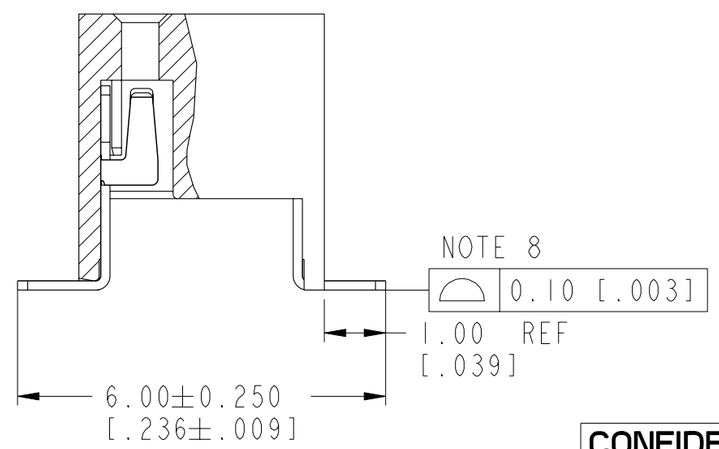

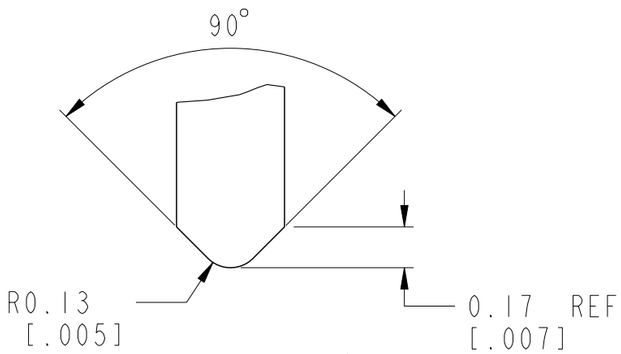

DETAIL A
SCALE 40:1

rev	ecn no	dr	date
A	S10103	JPEH	2001-07-31
B	S10139	JPEH	2001-10-03
C	S20092	JPEH	2002-07-19
D	S04-0252	KBM	2004-11-26
E	S06-0278	KBM	2005-01-10
F	S07-0199	KHL	2007-06-11
G	S10-0064	KHL	2010-03-24

CONFIDENTIAL

www.fciconnect.com

surface - ISO 1302 | tolerance std ISO 406 ISO 1101 | projection | MM/INCH

TOLERANCES UNLESS OTHERWISE SPECIFIED

Dr	JPEH	2002-07-19	ANGULAR	LINEAR	0.X	±0.3	size A3	Scale 10:1
Eng	JPEH	2002-07-19			0.XX	±0.13		
Chr	KH LEE	2010-03-24	0° ±2°		0.XXX	±0.051	ECN	S10-0064
Appr	JOEY NG	2010-03-24	Product family			LPVCC	Spec ref	-

title: LPVCC
4.5 TOP ENTRY SMT ASSY

dwg no: 55510 | Rev. G

catalog no: - | CUSTOMER | sheet 1 of 3

Copyright FCI.

REV E - 2006-03-28

PDM: Rev:G STATUS: Released Printed: Apr 10, 2010

PRODUCT NO	PRODUCT NO	POSITIONS	DIM. A	DIM.B
55510-X04 SEE NOTE 5	55510-X04LF SEE NOTE 6 & 11	2 X 2	2.00 / .079	3.92 / .154
55510-X06	55510-X06LF	2 X 3	4.00 / .158	5.92 / .233
55510-X08	55510-X08LF	2 X 4	6.00 / .236	7.92 / .312
55510-X10	55510-X10LF	2 X 5	8.00 / .315	9.92 / .391
55510-X12	55510-X12LF	2 X 6	10.00 / .394	11.92 / .469
55510-X14	55510-X14LF	2 X 7	12.00 / .472	13.92 / .548
55510-X16	55510-X16LF	2 X 8	14.00 / .551	15.92 / .627
55510-X18	55510-X18LF	2 X 9	16.00 / .630	17.92 / .706
55510-X20	55510-X20LF	2 X 10	18.00 / .709	19.92 / .784
55510-X22	55510-X22LF	2 X 11	20.00 / .787	21.92 / .863
55510-X24	55510-X24LF	2 X 12	22.00 / .866	23.92 / .942
55510-X26	55510-X26LF	2 X 13	24.00 / .945	25.92 / 1.020
55510-X28	55510-X28LF	2 X 14	26.00 / 1.024	27.92 / 1.099
55510-X30	55510-X30LF	2 X 15	28.00 / 1.102	29.92 / 1.178
55510-X32	55510-X32LF	2 X 16	30.00 / 1.181	31.92 / 1.257
55510-X34	55510-X34LF	2 X 17	32.00 / 1.260	33.92 / 1.335
55510-X36	55510-X36LF	2 X 18	34.00 / 1.339	35.92 / 1.414
55510-X38	55510-X38LF	2 X 19	36.00 / 1.417	37.92 / 1.493
55510-X40	55510-X40LF	2 X 20	38.00 / 1.496	39.92 / 1.572
55510-X42	55510-X42LF	2 X 21	40.00 / 1.575	41.92 / 1.650
55510-X44	55510-X44LF	2 X 22	42.00 / 1.654	43.92 / 1.729
55510-X46	55510-X46LF	2 X 23	44.00 / 1.732	45.92 / 1.808
55510-X48	55510-X48LF	2 X 24	46.00 / 1.811	47.92 / 1.887
55510-X50 SEE NOTE 5	55510-X50LF SEE NOTE 6 & 11	2 X 25	48.00 / 1.890	49.92 / 1.965

PLATING OPTIONS OVER CONTACT AREA
0 = 0.05µm/2µ"Au
1 = 0.76µm/30µ"Au
3 = 0.38µm/15µ"Au
G 5 = 2.54µm/100µ"100% MATTE TIN

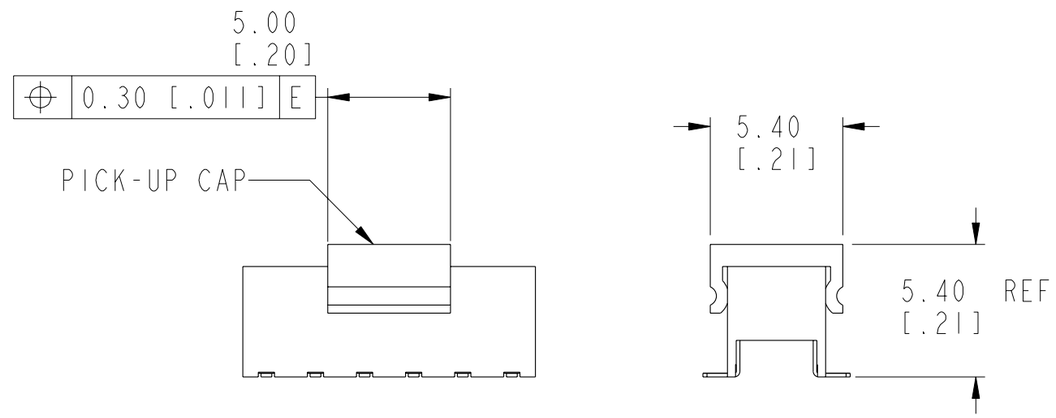

FIG 1
NOTE 7(b)

Copyright FCI.

CONFIDENTIAL

title	dwg no	Rev.
LPVCC 4.5 TOP ENTRY SMT ASSY	55510	G
catalog no -	CUSTOMER	sheet 2 of 3

REV E - 2006-03-28

NOTES:

1. HOUSING MATERIAL : HIGH TEMP PLASTIC.

2. TERMINAL MATERIAL : PHOSPHOR BRONZE.

3. TERMINAL RETENTION 0.5Kg/1.1 Lbs

4. 'V' CUT OPTIONAL - MANUFACTURING PROCESS OPTION.

5. USE TIN/LEAD PLATED SOLDER TAILS.

6. USE 100% MATTE TIN PLATED SOLDER TAILS

7. PRODUCT DESCRIPTION CODE:

XXXXX-X XXLF

- LF — LEAD FREE (SEE NOTE 6 & 11)
- XX — TOTAL POSITIONS
- X — PLATING AT CONTACT AREA
- XXXXX — BASE NUMBER

8. PACKAGING:
   - (a) XXXXX-XXX ---STD PACKAGING IN TUBE.
   - (b) XXXXX-XXXTR ---TAPE AND REEL PACKAGING WITH PICK-UP CAP. (FIG 1)
   - (c) XXXXX-XXXTRN ---TAPE AND REEL PACKAGING WITHOUT PICK-UP CAP.

9. CO-PLANARITY:
   FROM POSITION
   - X04 THRU -X38 : 0.10 / .004
   - X40 THRU -X50 : 0.12 / .005

G 10. PRODUCT SPECIFICATION: GS-12-008

11. THE HOUSING WILL WITHSTAND EXPOSURE TO 255°C PEAK TEMPERATURE FOR 10 SECONDS IN A CONVECTION, INFRA-RED OR VAPOR PHASE REFLOW OVEN.

12. THIS PRODUCT MEETS EUROPEAN UNION DIRECTIVES AND OTHER COUNTRY REGULATIONS AS DESCRIBED IN GS-22-008.

G 13. A G SYMBOL WILL BE NEXT TO ANY DIMENSION, VIEW OR NOTE WHICH HAS BEEN MODIFIED WITH THE CURRENT DRAWING REVISION.

Copyright FCI.

CONFIDENTIAL

title: LPVCC 4.5 TOP ENTRY SMT ASSY	dwg no: 55510		Rev. G
catalog no: -	CUSTOMER	sheet 3 of 3	

REV E - 2006-03-28